Use and movement areas

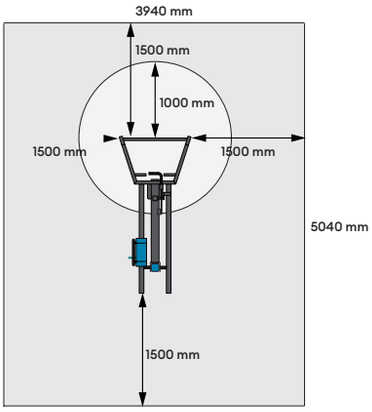

Target muscles

Foundation

1. For example artificial turf or moldable safety platform max. 40 mm
2. Concrete min. 120 mm below equipments
3. Ground frost insulation, thickness based on the ground

Concrete casting and positioning

Length 2500 mm
Width 1000 mm
Thickness 120-150 mm

- Ground frost insulation
- Rebaring
- Adequate drying time must be ensured

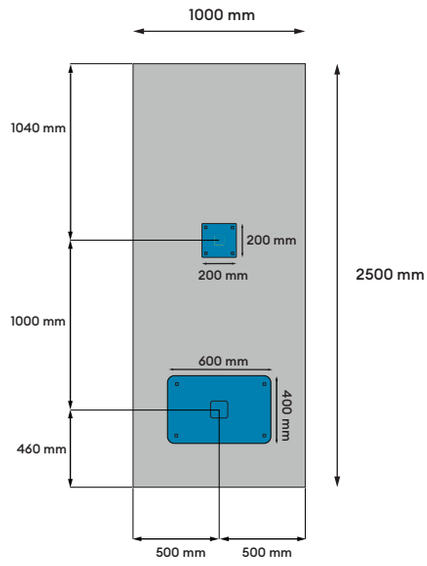

Product specification

Length	2040 mm
Width	930 mm
Height	1880 mm
Equipment weight	169 kg (1 x weight unit) 227 kg (2 x weight unit)
Age	+ 14
Safety area	20 m^2
Base	surface mounting to concrete
Standard	EN16630
Country of manufacture	Finland
Metal parts	steel
Tube strengths	4-6 mm
Coating solution	Zink and powder coating

Details

- Effective and safe exercise equipment
- Adjustable loading
- Adjustable starting height
- Maintenance-free polymer bearings
- 20 - 60 kg (1 x weight unit)
- 20 - 90 kg (2 x weight unit)
- The products are available in most RAL Classic colors. The standard colors are RAL 1017, RAL 3020, RAL 5012, RAL 6018 and RAL 7036.

Important

Installation depth for all Omnigym® units: top surface of the concrete base on the ground level or max. -40 mm allowance for the surface material to be used. (See foundation figure)