ECHO Line
FLOOR 100

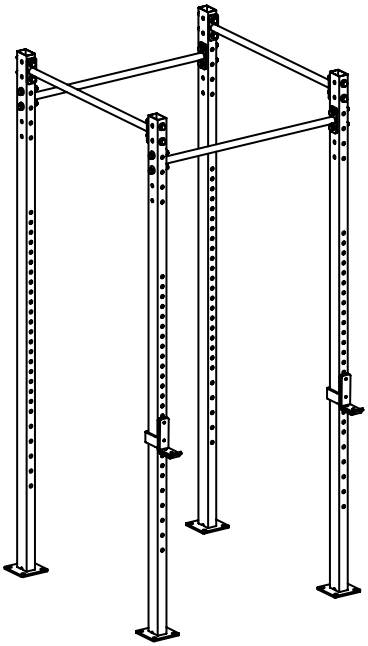

BEARFITNESS
STRONG.TRAINING.EQUIPMENT

Part list

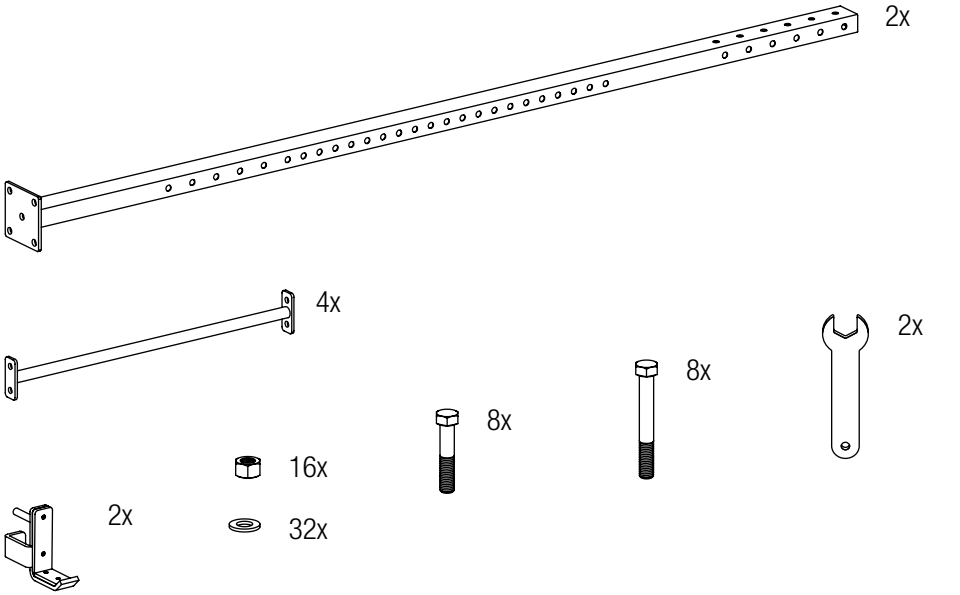

1.

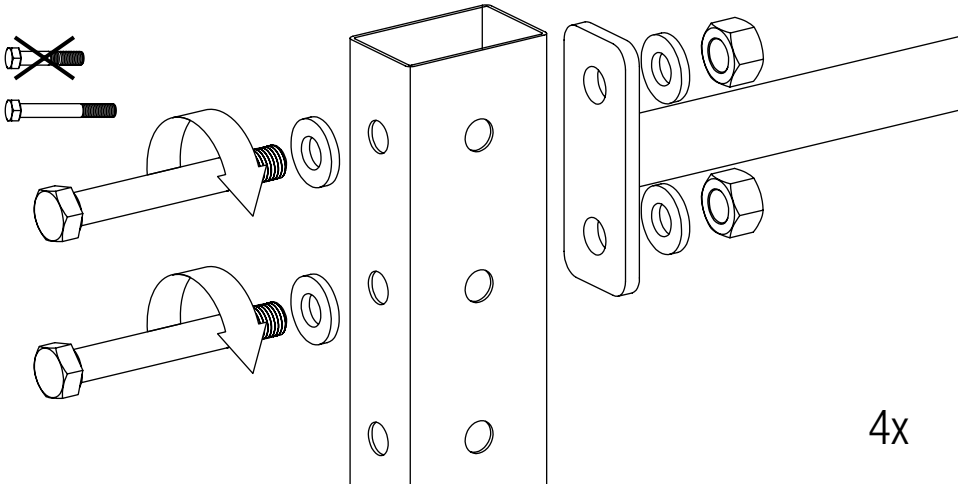

2.

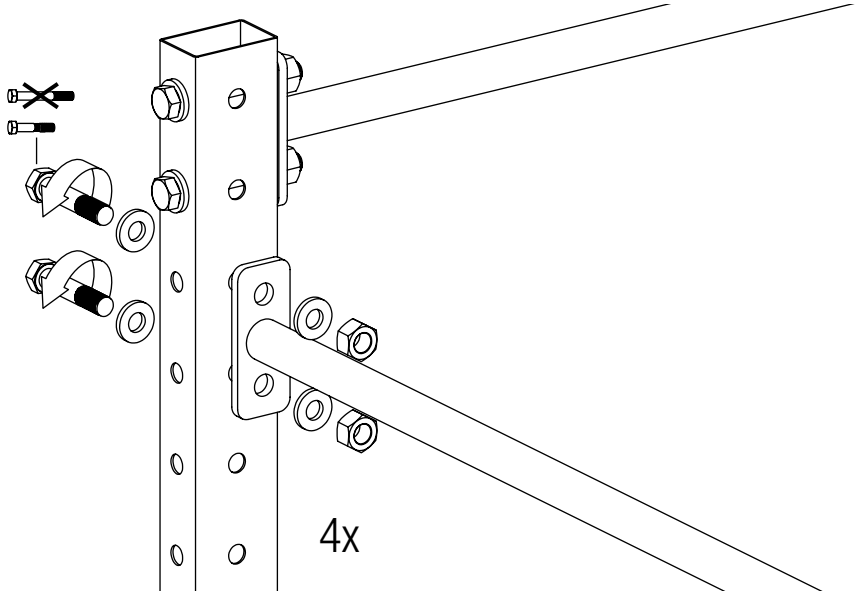

3.

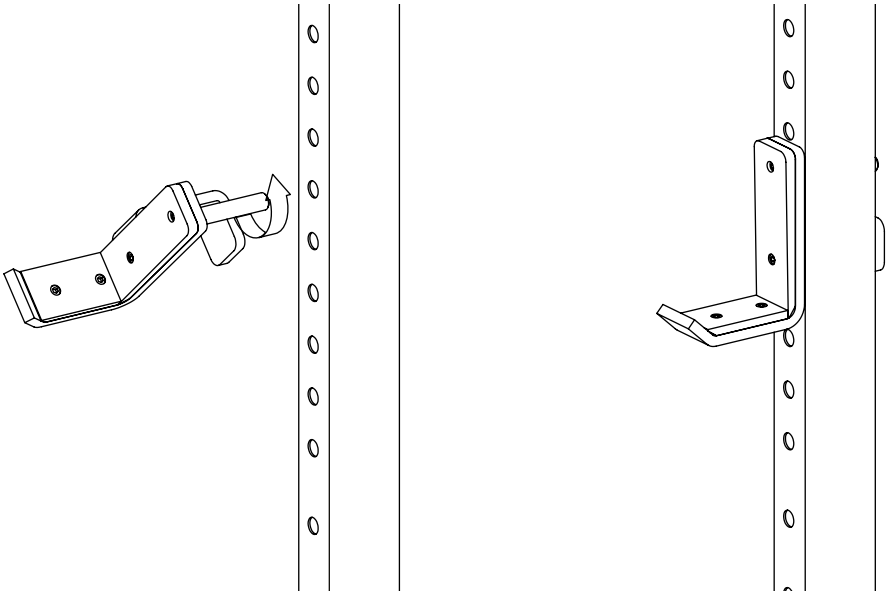

BEAR FITNESS

STRONG.TRAINING.EQUIPMENT